6. POULTRY HOUSING AND FEEDING

Can you recall ?

What do you mean by poultry?

Commercial chicken lay more than 310 egg in a laying year cycle. This high egg production can best be achieved if a comfortable housing is provided for them. Housing provides comfort and protects them from sun rays, rain, wind and predators. The poultry house should be well ventilated, reasonably cool in summer, warm during winter and free from drafts. In our country open sided poultry houses are very popular except in very cold areas. In conclusion, we can say that poultry is housed for comfort and protection to achieve efficient production and convenience to the poultry farmer.

Do you know ?

Housing protects birds from sun, rain, wind, predators and provides comfort to get maximum production.

Essentials of good poultry housing

1. Comfort : The best egg production is secured from birds that are comfortable and happy.The house should remain dry and must provide adequate accommodation and sufficient fresh air.

2. Protection : House should protect the birds from extreme weather conditions. It should safeguard against theft and attack from natural enemies.

3. Convenience : The house should be located at a convenient place and the arrangements of equipments in house should allow cleaning and other operations easily.

6.1 Principles of poultry housing

In planning a poultry house the following principles should be taken in to consideration.

1. **Location of house :** The house should be located on a infertile, well drained ground, safe from flood water and should have easy access from the road.
2. **Long axis of the house :** In hot parts of the country, the long axis of the house should run from East to West and in cold parts it should be North to South.

Can you tell ?

Why long axis of the house should run from east to west in hot parts of the country?

3. **Relation to other building :** The distance between the two houses for the birds of the same age group should be at least 20 m to allow proper ventilation. The houses of young stock should be at least 50 to 100 m away from adult stock house. This helps to prevent disease transmission.

Remember...

The brooder house should be at least 50 – 100 m away from house of adult stock.

4. **Width of house :** The width in open sided houses should not be more than 9 m.
5. **The height of house:** It is ordinarily 2.5 to 3.3 m from the foundation to the roof line. However, the height of the roof depends on the temperature of the place. A high ceiling keeps the inside temperature low.
6. **Floor of house:** The floor should be moisture proof, free from cracks, easy to clean and rat proof, especially in deep litter system.

7. **Shade and protection:** The climatic conditions and age group of birds will determine the extent of side opening. In open side deep litter houses two third and cage houses the maximum of the area of the side walls is kept open and fitted with wire mesh for proper ventilation, where temperature is continuously high. An overhang of 1 m will prevent the rain water splashing inside the house.

8. **Durability and cost:** A poultry house should be durable, comfortable, safe and low cost.

Do you know ?

Why floor must be moisture proof, easy to clean and rat proof in deep litter system?

6.2 Construction of house

The poultry houses are designed and constructed for protection of birds from extreme weather, infective organisms, parasites, predators and thieves. It is necessary to know, identify and select proper material for construction of poultry house.

1. **Foundation :** It should have enough hold on the ground for supporting the building and hence permanent poultry house should have concrete foundation. Foundation should be at least one feet above the ground level.

2. **The floor :** The floor of house should be smooth, free from dampness, without cracks, easy to clean and disinfect, rat proof and durable.

i. **Concrete floor :** A well laid concrete floor is the safest way to meet these requirements and is recommended in preference to any other kind of floor.

ii. **Wire mesh floor :** Wire mesh floor or preferably mesh of expanded metal is the best for portable houses. The expanded metal although more expensive, is stronger, more durable and does not sag like the wire mesh.

3. **Walls :** The wall should be water proof, wind proof, and finished with interior surfaces that are easy to clean and disinfect. The lower portion of the side walls up to height of 1 – 1.5 feet is built with solid bricks. The upper portion of the wall is made up of chicken wire mesh supported by bricks and pillars.

4. **Doors :** The door of the house must be on the south or north and made up of an angle iron frame covered with half inch mesh. The size of the door should be always large enough to allow a man to conveniently get through.

5. **Water tank :** Water tank should be constructed nearby shed as per capacity of farm.

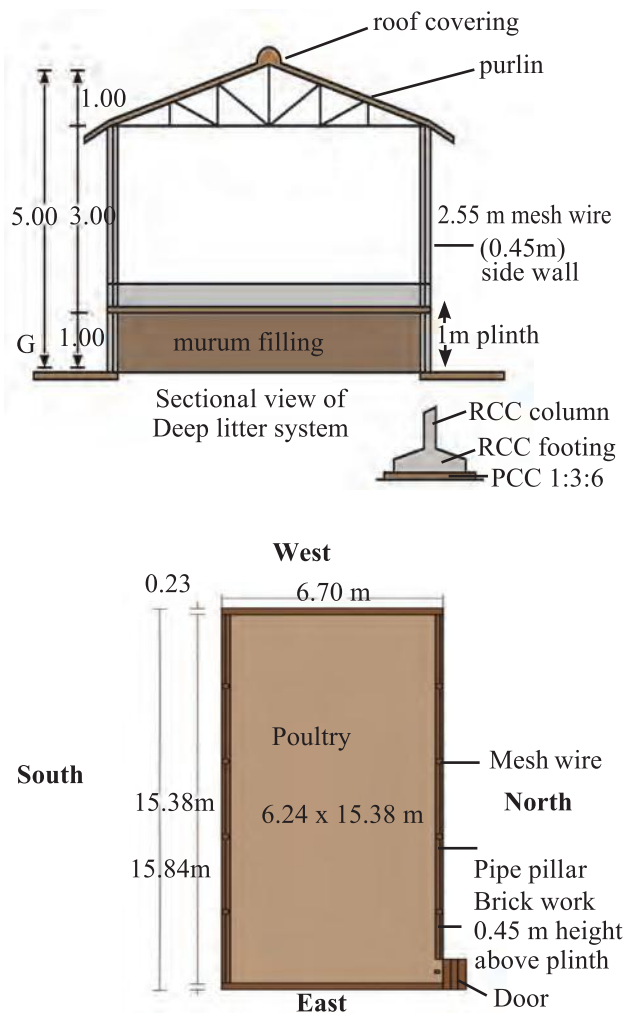

Fig. 6.1 : Ground floor plan for 1000 broilers in Deep litter system

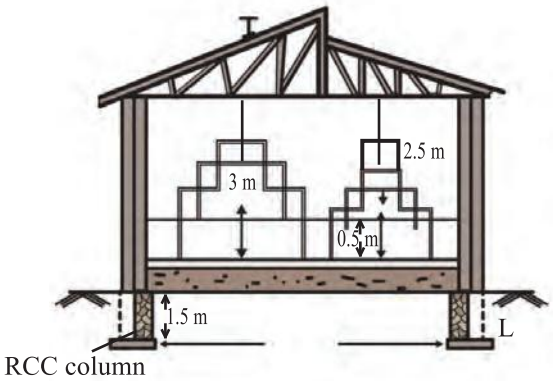

Fig. 6.2 : Sectional view of cage system

Space requirement

The weight of a day old broiler chick is about 40 grams and it attains a weight of about 2000 grams in period of 42 days in meat type birds. So as the chicks grow in age and size, they require increased space. If there is insufficient space, chicks do not get fresh air, enough feed and water.

The space for floor, feeder and waterer for different age group of birds is shown in Table 6.1.

Do you know ?

The chicken is a wild jungle fowl, sought safety and rests on the high limbs of a tree.

6.3 Systems of poultry keeping

The type of housing adopted depends on the availability of land, type of bird and the capital. There are four systems of housing generally followed in the poultry farming.

1. Free range system
2. Semi intensive system
3. Intensive system :
   A. Deep litter system B. Cage system
4. Environment control housing system

Observe and discuss...

Visit nearby poultry farms and note down difference between deep litter and cage system

Table 6.1 : Space requirement for different age groups of birds

Type of bird	Age (weeks)	Floor space (Sq. ft.)	Feeder space		Waterer space	
			(inch)	(cm)	(inch)	(cm)
A. Deep litter system						
Layer i) Chicks	0 – 4	0.50	1.00	2.50	0.50	1.25
	4 – 7	1.00	2.00	5.00	0.50	1.25
ii) Grower	8-12	1.50	3.50	8.00	0.75	2.00
	13 – 20	2.00	5.00	12.00	0.75	2.00
iii) Layer	21 – 72	2.50	6.00	15.00	1.00	2.50
Broiler	0 – 4	0.60	2.00	5.00	0.50	1.25
	4 onwards	1.20	3.50	8.00	1.00	2.50
B. Cage system						
Layer i) Chicks	0 – 7	0.24	1.00	2.50	0.50	1.25
ii) Grower	8 – 20	0.48	2.00	5.00	0.75	2.00
iii) Layer	21 – 72	0.72	3.00	7.50	1.00	2.50

1. Free range system

This method is the oldest of all and has been used for centuries by general farmers, where there is no shortage of land. This system allows great but not unlimited, space to the birds on land where they can find an appreciable amount of food in the form of herbage, seeds and insects. At present due to advantages of intensive methods this system is almost out-dated, but it plays important role in rural area.

Advantages

1. Less capital investment.
2. Minimum expenses on feed.
3. Less labour is required.

Disadvantages

1. Low egg production and growth.
2. More chances of infectious diseases including parasitic infestation.
3. No protection from predatory animals and birds
4. Sometimes birds lay eggs outside the area.
5. Risk of theft of eggs and birds.
6. More loss of energy in movement of birds.

Backyard poultry farming

1. Backyard poultry farming means rearing chicken in small numbers (10-20) by each household in the backyard under free range system.
2. The birds are allowed for foraging provided with supplementary feeding and clean water during the day time, while at night they are provided with shelter, made of locally available low cost.
3. Backyard poultry farming is an old age profession of rural India.
4. It is having tremendous potential to increase poultry production and can definitely contribute to poverty reduction.
5. Backyard poultry can easily be started with improved backyard poultry breeds such as Giriraja, Grampriya and swarnadhara.

Remember...

Chicks from improved backyard poultry breeds need brooding and care during initial four weeks of age. After four weeks, they can be let free for scavenging in backyard. The night shelter should have good ventilation and protection from predators and plenty of clean water should be made available. The birds must be vaccinated against Mareks and Ranikhet disease. There should be periodic deworming at 3-4 months interval.

Advantages

1. Low initial investment.
2. Less expenses on feed.
3. Labour requirement is nil. It can be managed by farming members, women, childrens and old aged persons.
4. Production from backyard poultry farming fetches higher price as compared to those from intensive poultry farming.
5. Birds under backyard farming efficiently convert the wastage material (insects, ants, fallen grains, green grass, kitchen wastage, vegetable wastage etc) into high quality protein for human consumption.
6. Backyard farming can minimize environment pollution which is a problem with the intensive poultry farming.

Disadvantages

1. Low production and growth.
2. Chances of infectious diseases.

Fig. 6.3 : Free range rearing system

2. Semi intensive system

This system is adopted where the free space available is limited, but it is necessary to allow 10 square feet per bird for outside run. Shed should be constructed to protect birds at night time, birds lay eggs in the shed. Feed and water is made available in outside the run area.

Remember...

This method is used for organic eggs and meat production.

Advantages

1. Less space is needed than free range system.
2. Capital investment is low as compared to intensive system.
3. Protection from predatory animals and birds.
4. Reduced chances of spread of diseases than free range system.
5. Protection from cold, sunshine and rain.
6. Useful for both egg and meat production.

Disadvantages

1. Low egg production and growth as compared to intensive system of housing.
2. High expenses on labour as compared to free range system.
3. Daily cleaning of run is necessary.

Fig. 6.4 : Semi intensive system

3. Intensive system

In this system, the birds are confined to the house entirely, with no access to land outside and it is usually adopted where land is limited and expensive. The traditional system of maintaining poultry under free range or semi intensive has been replaced to a large extent by the intensive system. Under intensive system, large number of birds are reared under deep litter or cage system.

There are two types of intensive system namely. **Deep litter and Cage system**.

Observe and discuss...

Visit deep litter and cage house poultry farm and find out differences between them.

A. Deep litter system

In this system the floor of house is covered with bedding material like rice husk, straw, saw dust, ground nut kernels or leaves up to depth of 4-6 inches; the birds are reared on it at all times. It is called deep litter. Deep litter system is commonly used all over the world. It is economical, hygienic, comfortable and safe to the birds. Right number of birds should be housed to keep litter always dry. The house should be well ventilated. The litter should be stirred at least twice in a week.

Do you know ?

Why the litter should be stirred?

Fig. 6.5 (a) : Inner view of deep litter system

Fig. 6.5 (b) : Outer view of deep litter system

When birds are housed on deep litter, placement of waterer should receive due attention to keep litter dry. At the end of the laying or after selling broilers, litter can be used as manure.

Can you think ?

Why deep litter system is preferred for broilers?

Advantages

1. **Safety of birds :** The birds and eggs are safe in deep litter house.
2. **Litter as a source of nutrient :** The build up deep litter also supplies some nutrients to the birds.

Remember...

Deep litter system increases eggs and meat production efficiency of birds.

3. **Disease control :** The level of worm infection is much lower than the birds kept in semi intensive method.
4. **Labour saving :** There is no need to clean a pen for a whole year or up to selling of broilers. The only attention required is the regular stirring and adding of same litter material as needed.
5. **Temperature control :** This is an important feature in a hot climate. The litter maintains its own constant temperature, so birds burrow into it when the air temperature is high and thereby cool themselves. Conversely, they can warm themselves in the same way when the weather is very cool.

Can you tell ?

Why deep litter house remains cool in summer and warm during winter?

6. **Organic manure :** Poultry droppings get mixed with the litter produces valuable organic manure at the end of growing cycle. Organic manure is an important source of income to poultry farmer in deep litter system.

Disadvantages

1. Requirement of balanced feed at all times.
2. It remains moist and full of foul smell if not cared properly.
3. It is difficult to control vices of birds like cannibalism, feather pecking, egg eating.
4. It increases chances of disease spread like coccidiosis, salmonellosis etc.

B. Cage system

Do you know ?

The cage system of rearing is considered as a best for layer birds.

In this system hens are confined in a cage compartment just large enough to permit hen required movement and allow her to stand and sit comfortably. Both food and water is provided from outside of cage. Cage floor has a slope from back to the front, so that the eggs as they are laid, roll out of the cage to a receiving gutter.Cage system can be used for all age groups of layer type birds in all agro climatic conditions.

California type of cages is better than the three or four tier battery cages as it saves labour. Provision of automatic watering and

feeding system increases the efficiency of cage system for commercial egg production.

Advantages

1. Economy in space.
2. Better prevention and control of diseases like coccidiosis.
3. Less mortality rate and expenses on medication are minimum.
4. Reduced feed consumption and less labour requirement.
5. Increased laying efficiency.
6. Better flock supervision and easy maintenance.
7. Cannibalism is minimized.
8. Convenient for daily farm work.

Can you tell ?

Why California cage system is most suitable for layer farming?

Disadvantages

1. High initial capital investment.
2. Chances of cage layer fatigue and lameness are more.
3. Skilled labour is required.
4. Control of odour and flies is difficult

Fig. 6.6 : Cage system of housing

4. Environment control housing

Environment Control (EC) housing is the modern method of housing in which inside conditions are maintained as near as possible to the bird's optimum requirements. Much of the structural make up of the EC house is similar to

Table 6.2 : Difference between deep litter and cage system

Sr. No.	Parameters	Deep litter	Cage system
1	Floor economy	Less	More
2	Disease prevention	Less	More
3	Mortality rate	More	Less
4	Expenses on medication	More	Less
5	Saving of feed	Less	More
6	Labour saving	Less	More
7	Supervision	Good	Better
8	Feather pecking	Yes	No
9	Maintenance	Easy	Easier
10	Investment	Low	High

that of the house with open sides. Insulation is must in environment control house.

Salient features of EC house

1. This type of house is completely enclosed with no windows.
2. Air must be moved through the EC house to increase oxygen to remove moisture and ammonia.
3. Optimum temperature is maintained with the help of exhaust fans and fresh air is brought in through (cooling pads) inlet opening.

Observe and discuss...

Visit nearby EC house and record advantages over open sided house.

4. Artificial light, rather than natural day light is used to illuminate the interior.
5. Usually the house is not heated in the cooler month, the heat from the birds being used to keep inside temperature within a comfortable range.
6. In EC house, there are different systems such as automatic feeding, watering and lighting.
7. Ventilation, temperature and humidity are auto controlled as per birds requirements.

Advantages

1. Less floor space requirement (0.65 sq.ft. per broiler birds).
2. Better prevention and control of diseases.
3. Less mortality rate and expenses on medication.
4. Faster and uniform growth.
5. Increased egg and meat production efficiency with improved FCR.
6. Better and consistent performance thought out year.
7. Easy for management.
8. Improves profitability with reduced challenges.

Disadvantages

1. High initial investment.
2. Skilled labour is required.
3. It requires continuous electric supply.

House with cooling pads

House with exhaust fans

Inner view

Inner view

Fig. 6.7 : Environment control poultry housing system

6.4 Poultry house equipments

The poultry house should be equipped with brooder, feeders, waterers, nest box, grit box, and other items which are essential for optimum production. They should be simple in operation, cheap, movable,durable and can easily be cleaned and disinfected.

1. Feeder

Feeders are usually of two types:

1. Round or circular (Automatic round plastic feeder)
2. Round or circular Chick feeder
3. Linear feeder (long feeder)

Essential features of an ideal feeder

1. It should avoid wastage.
2. Prevent the birds from getting their feet into the feed and from resting on it
3. Easy to clean
4. Easy for the birds to eat from bottom of the feeder

1. Round or circular feeder : It is suitable for birds of all age group. It can be easily cleaned and the frequency of refilling is fewer. These type of feeders are invariably suspended and the height from the feeder is adjusted according to height of birds.

Fig. 6.8 : Round feeder

Fig. 6.9 : Chick feeder

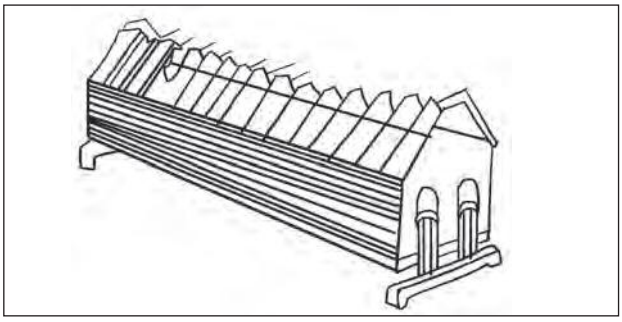

Fig. 6.10 : Linear feeder

2. Round or Circular chick feeder : Small plastic feeder of 2 to 3 kg capacity is suitable in the first and second weeks of brooding. Feeder height can be adjusted by the stand. Generally one feeder is sufficient for 75 chicks in first and second week.

3. Linear feeder : It is a horizontal long feeder, made up of galvanized sheet and grill with adjustable stand. It is durable and height can be adjusted with the help of stand. Feeder should have convex bottom so that the birds can reach the feed even when it is in small amount.

Do you know ?

Features of an ideal watering device

- Should be large enough for a full day water supply.
- Should keep the water clean and cool.
- Does not rust or break easily.
- Does not topple over readily.
- Does not allow the birds to contaminate the water.

2. Waterer or drinker

The following watering devices are used.

1. Chick drinker : Small plastic drinker of 1.5 to 5 liters capacity are suitable in the first and second weeks of brooding. Drinker height can be adjusted by stand. Generally one drinker is sufficient for 75-100 chicks in first and second week.

Fig. 6.11 : Chick drinker

Fig. 6.12 : Automatic drinker

2. Automatic round drinker : It is an ideal watering device. It is very easy to clean. Automatically water comes in the drinker as per adjustment. Drinker height can be adjustable so that it is suitable for birds of all age groups.

Observe and discuss...

Nipple and cup waterer are ideal for cage and environment control houses.

3. Nipple : Bird press the button of the nipples by their beak and every time one drop of water is released. The bird repeat the process for drinking enough quantity of water. One nipple is sufficient for three birds.

Fig. 6.13 : Nipple system of water drinking

4. Cup waterer : Small drinking cup of about two inch diameter. A valve is situated in the bottom of cup which opens and closes and maintain the fixed water level in cup, even after drinking by the birds.

3. Brooder

Chicks are unable to maintain their body temperature in first three weeks of their life. So artificial heat should be provided to them.

Remember...

The equipment which produces artificial heat is known as brooder.

The different types of brooder are as follows

1. Hover type electric brooder : It is a cone or dome shaped piece of tin sheet standing on legs or hanging by a wire over chicks as canopy with bulb in the middle to radiate all heat down. A six feet hover can accommodate nearly 500 chicks.

Do you know ?

In electric brooder 2 watt light per chick is required

2. Gas brooder : It is dome shaped. Heat in this brooder produced with the help of LPG.

3. Battery brooder : These are built in tiers. The floor and walls are made of expanded metal. Every tier of brooder has a tin tray to collect faecal matter. Heat is provided with electric lamps.

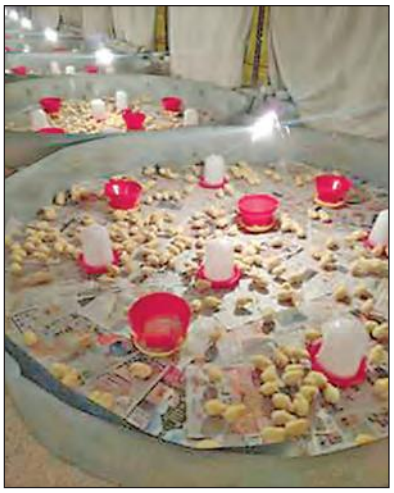

Fig. 6.14 : Electric Brooder

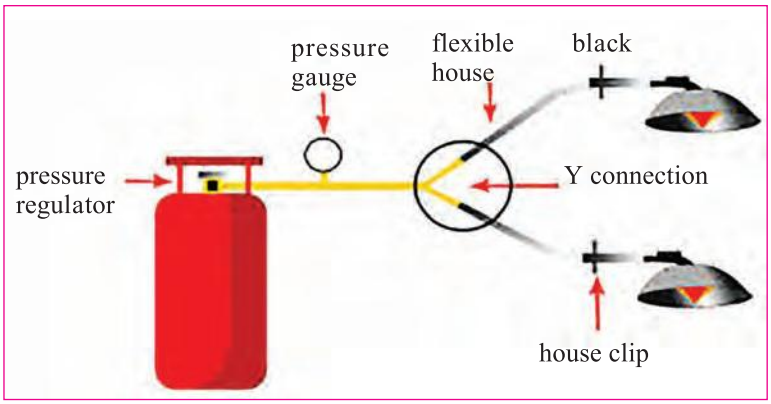

Fig. 6.15 : Gas brooder

4. Nest box

Nest box is a place where birds lay their eggs. Nest boxes are placed at least one month before the start of lay in order to encourage the birds to lay eggs in the nest boxes.

Remember...

Nest boxes are of two types – Open nest and Trap nest

Trap nest is provided with trap doors, by which birds shut themselves in when they enter for laying, later the attendant removes the bird and marks its identity on the egg. They are used for breeding purpose whereas open nest are used in commercial flocks.

Fig. 6.16 : Nest Box

5. Debeaker

An automatic electric machine known as debeaker is used for debeaking.

Fig. 6.17 : Debeaker

6. Filler flats

The eggs are collected from nests by the poultry worker and kept in special type of trays known as filler flats.

Do you know ?

Filler flats are of two types – paper pulp and plastic.

Each flat has capacity to hold 30 eggs. Individual egg is kept in separate hole, with broad end up. Once the egg is embedded in the hole of the flat, it does not move. Thus the chances of breakage in egg are minimized.

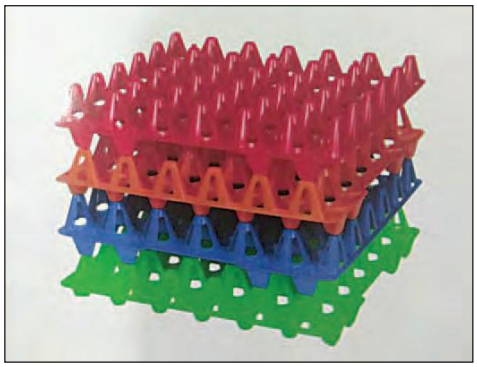

Fig. 6.18 : Filler flats (Plastic)

Fig. 6.19 : Filler flats (Paper)

7. Egg boxes

The purpose of egg boxes is to hold the eggs contained in the filler flats so that eggs can be transported to long distance safely. The dimensions of egg boxes are such that 6 to 8 trays can be accommodated one over the other in one box.

8. Egg candler / Candling box

It consists of a container or wooden box closed from all sides but has an hole of 2.5 to 3 cm in a diameter on one side facing the bulb fitted on opposite side. It is used for candling of eggs.

Remember...

- Eggs are candled with the help of candlers during the incubation period.
- Eggs that are infertile, and those in which the embryos have died are removed.

9. Incubator

Incubator is a machine used for eggs incubation to produce chicks on large scale. Optimum and uniform temperature, humidity, turning of eggs and proper ventilation are maintained in a machine. Cleaning, disinfection and fumigation are the routine practices for incubation to produce healthy chicks.

Remember...

Incubators are of two types namely setter and hatcher

Fig. 6.20 : Outer and inner view of Incubator

a. Setter : In this machine eggs are placed for first 18 days. Optimum temperature and humidity is maintained with turning of eggs.

b. Hatcher : Eggs are transferred from setter to this machine on 19 th day. Eggs are placed in trays to receive chicks. Optimum temperature and humidity is maintained in hatcher up to 21 days for better hatchability.

10. Vaccinator

The equipment is used for giving vaccine or injectables to chicks and hens. The required amount of dose can be adjusted. It works continuously and it has self refill mechanism.

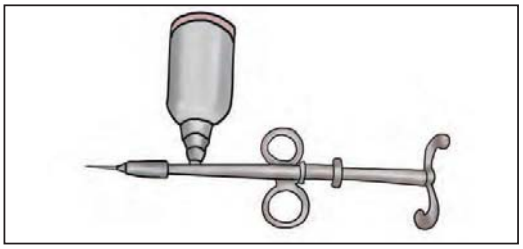

Fig. 6.21 : Vaccinator

11. Grinder

It is also called as hammer mill. A hammer mill is a machine used to grind or crush feed ingredient in to smaller pieces by the repeated blows of hammers.

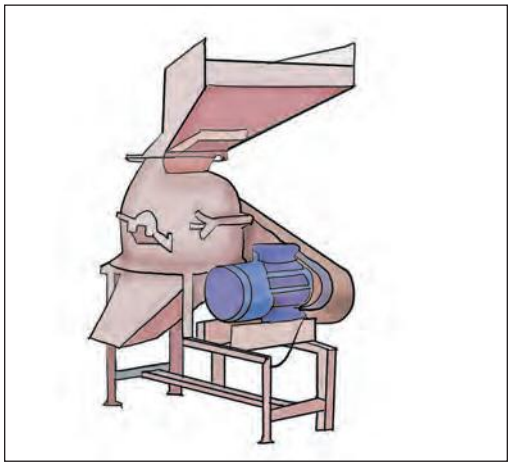

Fig. 6.22 : Grinder

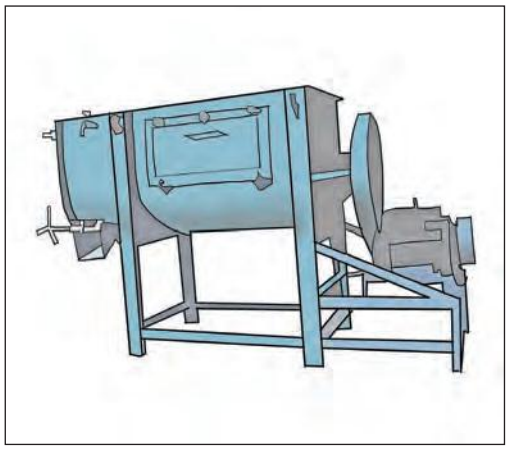

Fig. 6.23 : Mixer

12. Mixer

Mixer machine is used in feed mills for the proper mixing of feed ingredients and premix. Proper feed mixing being the key to balance feed production.

Feed mixers are of two types – vertical mixer and horizontal mixer.

Do you know ?

If feed is not mixed properly, ingredients and nutrients will not be properly distributed.

13. Sprinkler

They are used for sprinkling of water on the roof to cool the house.

Fig. 6.24 : Sprinkler

Fig. 6.25 : Fogger

14. Foggers

Line of foggers laid across the house at truss level, which deposit a fine mist of water on which cools poultry house. Fogging system is useful in dry climatic condition.

6.5 Poultry feeding

The poultry production is mainly dependent on the nutritional quality and the quantity of feed fed to the birds. In addition to scientific breeding and many other factors, efficiency in feeding is one of the key factors, for successful poultry production.

Do you know ?

Feeding alone costs about 70% of the total cost of production.

The birds require the feed mainly for the purpose of maintenance, growth, egg production, building up of new body cells and increasing resistance against diseases.

6.6 Principles of poultry feeding

Remember...

Nutritional requirement are quite specific and more precise in poultry due to their simple stomach.

Following factors should be considered, while computing ration and feeding of birds.

1. Birds have no lips or teeth, hence they require a more concentrated ration.
2. Digestive tract of bird is comparatively short, digestion is quite rapid, so their requirements are more precise and specific.
3. Due to higher rate of metabolism, birds require more exact ration as per recommended standards.

Do you know ?

Birds are non-ruminants and hence feed should not contain more than 6 to 8 per cent crude fibre.

4. Feed must be palatable and free from aflatoxins.
5. Feed must have all essential nutrients in balanced form.
6. Clean, fresh and cool water must be made available at all times.

6.7 Classification of poultry feed ingredients

The poultry feed ingredients are classified into following major groups…

1. Carbohydrates or energy rich feeds
2. Protein rich feeds
3. Fat sources
4. Feed supplements
5. Feed additives

Classification of Poultry Feed stuffs

Energy rich feeds

a. Cereal grains
- Maize
- Sorghum
- Wheat
- Barley
- Oat

b. Cereal by products
- Rice polish
- Molasses

Protein rich feeds

a. Vegetable source
- Soybean meal
- Groundnut cake
- Sunflower cake
- Coconut meal
- Sesame cake

b. Animal source
- Fish meal
- Meat meal
- Blood meal
- Liver residue

Fat sources
- Vegetable oil
- Lard
- Tallow

Feed supplements
- Vitamin supplements
- Mineral supplements

Feed additives
- Antioxidants
- Antibiotics
- Coccidiostats
- Anthelmintics
- Toxin binders
- Enzymes
- Flavouring agents
- Growth promoters

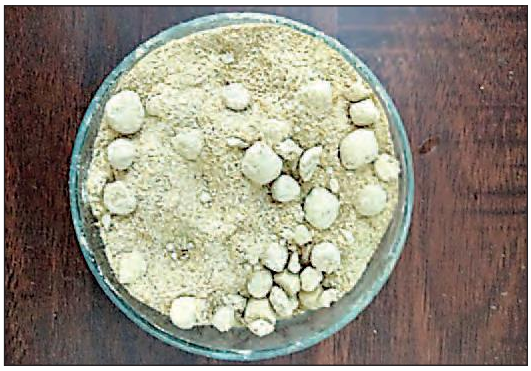

Fig. 6.26 : De-oiled rice bran

Fig. 6.27 : Maize

Fig. 6.28 : Shell grit

Fig. 6.29 : Soybean extraction

6.8 Balanced ration for poultry

Do you know ?

Ration is the allowance of feed given to the bird for a period of 24 hours

Definition

Ration which supplies the essential nutrients in right proportion according to the requirements for maintenance and various productive functions is called 'balanced ration'.

The term "nutrient" means any single class of feed, or group of like feeds that supports the life and makes it possible for birds to produce meat or eggs.

Remember...

Feed additives are not a nutrient, but added to enhance the quality of the nutrients.

Types of feeds

Layer chicken of different ages require different levels of nutrients.

Layer feeds are of the following three types

1. **Chick feed (chick mash / crumbs) :** A ration to be fed to chicks from 0 to 8 weeks of age.
2. **Grower feed (grower mash / crumbs):** A ration to be fed to grower birds in between 9 to 19 weeks of age.
3. **Layer feed (layer mash) :** A ration to be fed to laying birds after 20 weeks of age.

Broiler feeds are of the following three types

1. **Pre-starter ration :** A ration to be fed during the 0 - 7 days.
2. **Starter ration (mash / crumbs) :** A ration to be fed 8 - 21 days .
3. **Finisher ration (mash / pellets) :** A ration to be fed from 22 days onward up to sale of broiler.

Table 6.3 : Nutrient requirements for chicken feed

Type of bird	Age (Weeks)	Crude protein (%)	Metabolic Energy (Kcal/ kg)	Feed Quantity (kg)	Water requirement
Layer					
Chicks	0 – 8	20	2800	2.0	Twice the feed consumption
Grower	9 – 19	16	2500	5.0	
Layer	20 up to culling (72 weeks)	18	2600	40.0	
Broiler					
Pre-starter	0 – 7 days	23	3000	0.150	Twice the feed consumption
Starter	8 – 21 days	22	3100	0.750	
Finisher	22 days onward up to sale	20	3200	3.00	

Feed requirements

Nutrient required for different types and age group of chicken as per BIS 2007 has been given in Table 6.3

Principal points for consideration of feed formulation

- Easy availability of ingredients.
- Palatability of ingredients.
- Maximum inclusion level in feed.
- Cost of ingredient
- Nutrient composition and quality of each ingredient
- Nutrients requirement for poultry according to age, weight, class, breed, type etc.

Methods of feeding chicks, broilers and layers

A well balanced ration will give the most satisfactory results only when it is properly fed to the birds. Some of the popular methods of feeding are described below

1. Whole grain feeding

This is the oldest method of feeding in which birds are allowed to have free choice of ingredients as per their protein and energy requirement. Ingredients are kept in separate containers. Birds are permitted to balance their ration according to individual needs, however, it appears doubtful.

Advantage

This saves energy in grinding.

Disadvantages

1. Several feed hoppers are required.
2. More time is required to fill feed hoppers separately.

2. Grain and mash feeding

This method is slightly better than whole grain method. It involves feeding of grain mixture along with balanced mash.

Advantage

Protein level can be increased or decreased.

Disadvantages

1. Poultry man should be skilled.
2. It is inconvenient for handling and is time consuming.

3. All mash feeding

This method is common and desirable for all types of birds grown under litter and cage system. All the feed ingredients are ground, mixed in required proportion to form balanced ration and fed as a single balanced mixture.

Fig. 6.30 : Mash feed

Fig. 6.31 :Crumbs/Pellet feed

Advantages

1. Selective eating can be avoided.
2. Well balanced ration can be provided.

4. Crumbs / Pellet feeding

Do you know ?

Pellet feeding reduces the wastage of feed

Feeding mash is followed by feeding pellets or crumbs. Mash is pressed under steam to make crumbs or pellets. Chicks are given mash or crumb up to 4 weeks and thereafter they may be given pellets.

Advantages

1. Improves weight gain and efficiency of feed utilization.
2. Reduced feed wastage.
3. Prevents selective eating.

Disadvantages

1. Destroys vitamin A.
2. Problems of wet litter develops.
3. Increases cost of feed.

5. Restricted or controlled feeding

The method involves restriction of feed given to broiler, breeder and grower to control body weight of breeder and to reduce the feed cost instead of adlibitum feeding. Feed restriction to birds can be achived by two ways.

1. **Quantitative method :** Feed restriction on basis of quantity of feed
2. **Qualitative method :** Feed restriction on basis of nutritive quality of feed

Advantages

1. Delays age of sexual maturity.
2. Decreases the weight of bird at first egg and saves feed.
3. Slightly increases egg production and better egg weight.
4. Lower layer house mortality.
5. Increases feed efficiency.

Disadvantage

Restricting feed during starter age especially before 6 weeks causes severe stress

Exercises

Q. 1 Fill in the blanks

1. Space requirement in cage system for a layer should be ------ sq. ft.
2. In hot part of the country, the long axis of poultry house should be in ----- direction.
3. The distance between two houses for the birds of same age group should be at least ------ m.
4. The first debeaking (touching) operation is done at the age of ---- days
5. The width of open sided houses should not be more than ---- meter.
6. The distance between two poultry houses for young and adult stock should be at least ---- meter.
7. ……is the modern method of poultry housing.
8. A broiler requires …….sq.ft. of floor space in the environment control house.
9. ……is a machine used for egg incubation.
10. Nutrition alone costs about ------ % of the total cost of egg and meat production.
11. A ration which supplies the nutrients in right proportion according to the requirements of bird is called as ------ ration.
12. --------- is rich source of energy in poultry feed.
13. Layer chick feed should contain minimum ------ % crude protein.
14. ---------- is the best example of vegetable protein source.

Q. 2 Match the pairs

Group A	Group B
1. Energy source	a. Minerals
2. Protein source	b. Coccidiostats
3. Feed-supplements	c. Sunflower cake
4. Feed additives	d. Vegetable oil
5. Fat source	e. Rice polish

Q. 3 Identify the odd one out

1. Maize, Sorghum, Groundnut cake, Wheat
2. Antibiotics, Enzymes, Vitamin supplements, Antioxidants
3. Soybean Meal, Fish meal, Sesame cake, Lard
4. Vegetable oil, Tallow, Lard, Coconut meal
5. Fish meal, Meat meal, Liver residue,Soybean meal

Q. 4 Answer the following in brief.

1. Write short note on brooder.
2. Enlist the principles of poultry housing.
3. Write in brief about deep litter system of poultry rearing.
4. What are the essentials of good poultry housing?
5. What are the essential features of an ideal poultry feeder?
6. Write short note on backyard poultry farming.
7. What are the advantages of free range poultry housing system?
8. Enlist the systems of poultry keeping.

9. Give feed requirement of chicks/ growers / layers.
10. Give minimum crude protein and energy content of broiler feed.

Q. 5 Answer the following in detail.

1. Distinguish between deep litter and cage system.
2. Write about environment control housing with its advantages and disadvantages.
3. Describe cage system in detail.
4. Give classification of poultry feed ingredients.
5. Write in detail about methods of poultry feeding.